PTCAV/ABLAV/ABPA01/ABCO001/SANSUCH
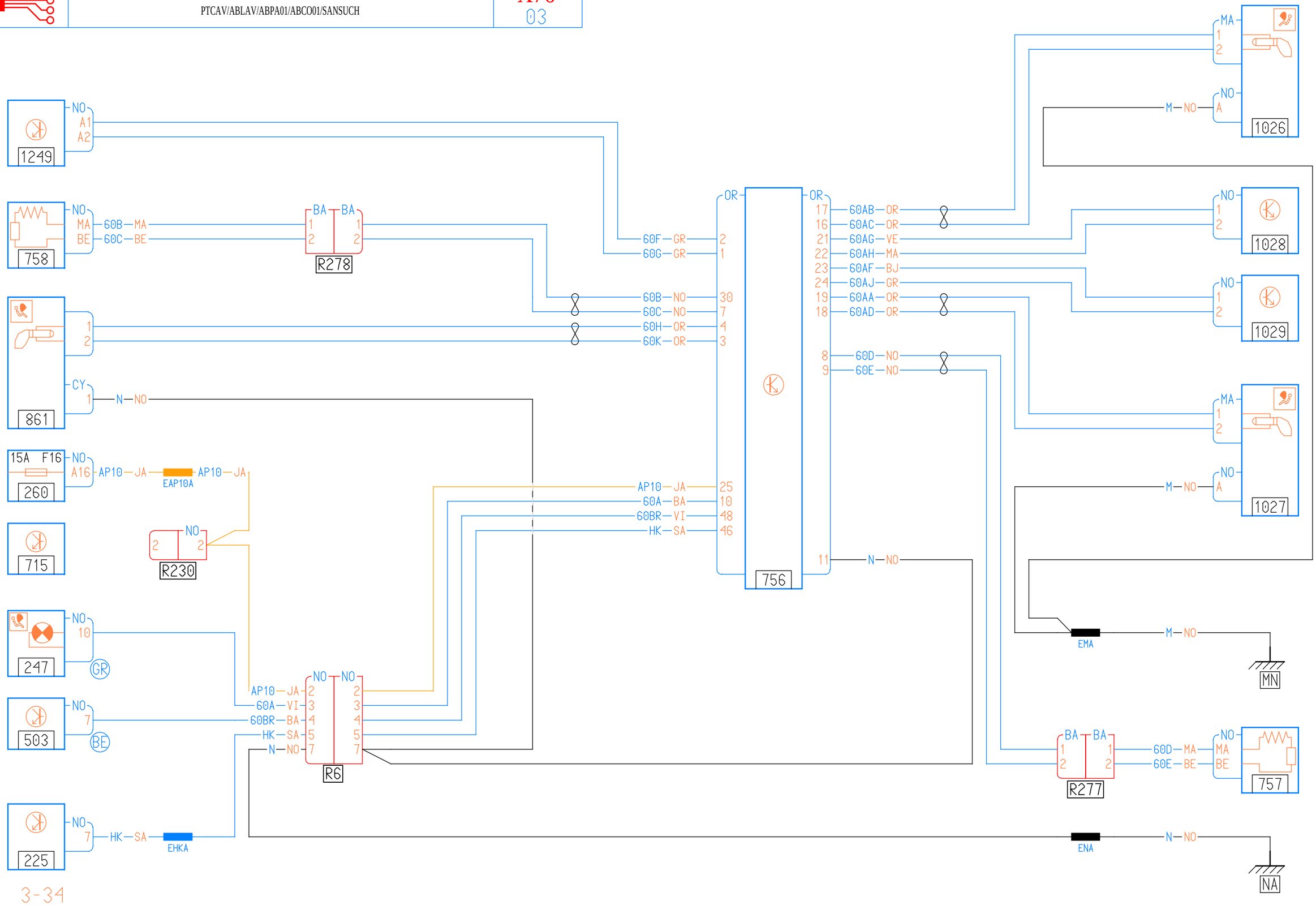
X76
03