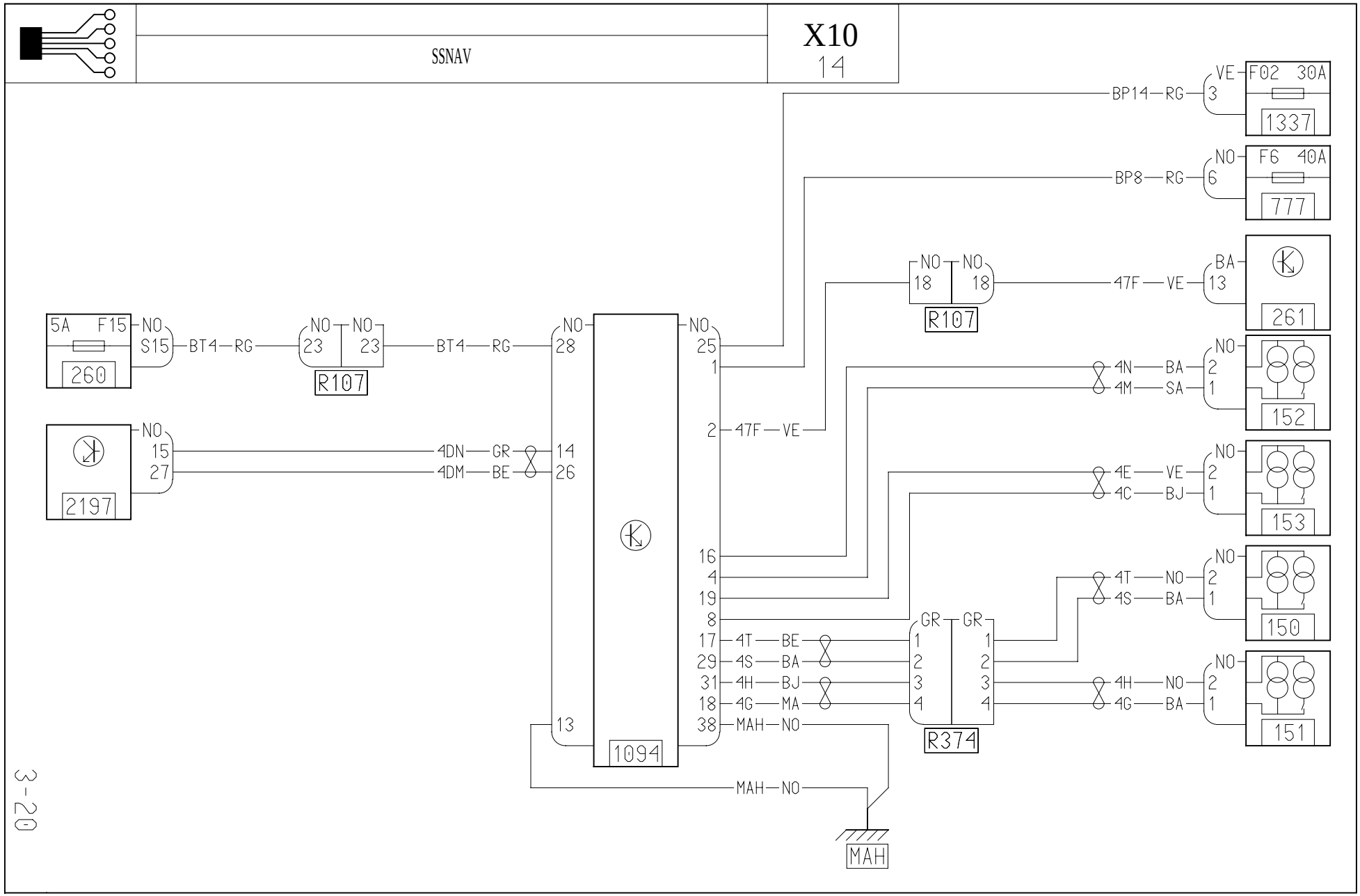
SSNAV
X10
14
BP14 RG
VE
3
F02 30A
1337
BP8 RG
NO
6
F6 40A
777
NO NO
18 18
R107
47F VE
BA
13
261
5A F15
NO
S15
260
BT4 RG
NO NO
23 23
R107
BT4 RG
NO
28
NO
25
1
4N BA
4M SA
NO
2
1
152
NO
15
27
2197
4DN GR
4DM BE
14
26
2 47F VE
4E VE
4C BJ
NO
2
1
153
16
4
19
8
17 4T BE
29 4S BA
31 4H BJ
18 4G MA
38 MAH NO
13
1094
GR GR
1 2 3 4
R374
4T NO
4S BA
NO
2
1
150
4H NO
4G BA
NO
2
1
151
MAH NO
MAH